THERMOSTATIC UNITS

DIVERTING VALVE
SERIES VTD500

The thermic valve series ESBE VTD500 with adjustable temperature is used for diverting applications. The valve diverts the incoming flow to the A or B port depending on fluid temperature.



External thread

OPERATION

The ESBE series VTD500 is a thermic 3-way valve designed for diverting applications. When the incoming fluid temperature is below the nominal diverting temperature it is diverted to the A port. When the incoming fluid temperature is above the nominal diverting temperature it is diverted to the B port. VTD500 series features an adjustable diverting temperature.

FUNCTION

The valve contains a thermostat with an adjustable diverting temperature from 42 to 52°C, which reacts on the incoming fluid temperature and changes the outgoing flow direction accordingly. The change-over from one port to the other is within a range of ±3°C, from the nominal set diverting temperature.

MEDIA

Maximum 50% glycol for freezing protection and oxygen absorbing compounds are allowed as additives. As both the viscosity and the thermal conduction are affected when glycol is added to the system water, this fact has to be considered when dimensioning the valve. When 30 - 50% glycol is added, the maximum output effect of the valve is decreased by 30 - 40%. A lower concentration of glycol may be disregarded.

SERVICE AND MAINTENANCE

We recommend equipping the valve connections with shutdown devices to facilitate future service. The valve does not need any maintenance under normal conditions. However thermostats are available and are easy to replace if necessary.

DIVERTING VALVE VTD500 DESIGNED FOR

- Heating
- Potable water
- Solar heating
- Zone

TECHNICAL DATA

Pressure class: PN 10
Diverting range shut off: 42–52°C ±3°C
Media temperature: continuously max. 100°C
temporarily max. 110°C
min 0°C
Max. differential pressure: 300 kPa (3 bar)
Leakrate, AB - A: 0,5%
AB - B: 2%
Connections: External thread (G), ISO 228/1

Material
Valve housing and other metal parts with fluid contact:
Dezincification resistant brass DZR

PED 2014/68/EU, article 4.3

Pressure Equipment in conformity with PED 2014/68/EU, article 4.3 (sound engineering practice). According to the directive the equipment shall not carry any CE mark.

FLOW PATTERN

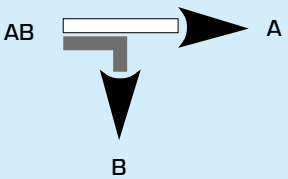

Diverting

© Copyright. Rights reserved to make alterations.

DIVERTING VALVE
SERIES VTD500

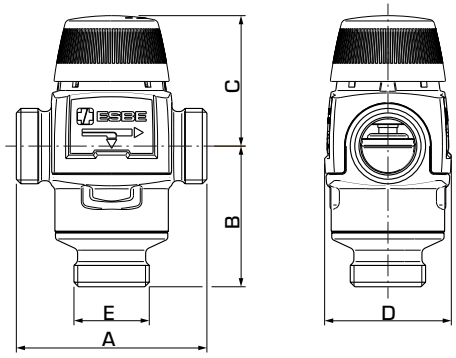

VTD582

SERIES VTD582, EXTERNAL THREAD

Art. No.	Reference* *	DN	Kvs*	Adjustable change-over point	Connection E	A	B	C	D	Weight [kg]	Note
31580100	VTD582	20	2,8	42–52°C	G 1"	84	62	60	56	0,86	

INSTALLATION EXAMPLES

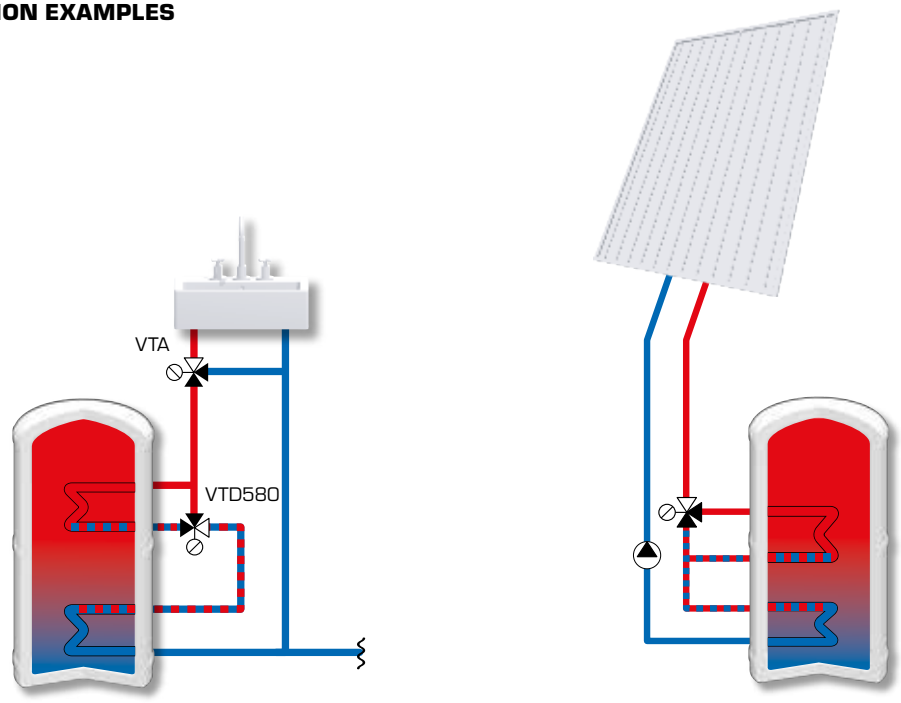

© Copyright. Rights reserved to make alterations.