RETURN TEMPERATURE UNIT
THERMOSTATIC, MIXING FUNCTION SERIES GST200

GST241

PRODUCT DESCRIPTION
The ESBE return temperature unit Series GST200 is designed for applications, where precision return temperature is required. The mixing groups is used for the return temperature control, mixing function, in the heating systems where temperature control over the heating water returning to the heating source is required. An example of such application can be a system with a solid fuel boiler. The GST200 secures that the boiler gets up to a high combustion temperature to ensure the lowest emission, high efficiency of the boiler which reduce tarring and increase the life span of the boiler (preventing condensation).

The return temperature unit is equipped with two shut-off valves with colour coded thermometers, a check valve placed on the return from the heating circuit and a high-class insulation shell. The unit is equipped with a thermostatic load valve series VTC400 with an adjustable temperature of 50-70°C.

When designing the circulation unit product line ESBE focused on performance, design, user friendly usage and environment. This applies to everything from manufacturing, materials to packaging.

VERSIONS
Series GST200

The ESBE series GST200 is a return temperature unit equipped with a pump and a thermostatic load valve series VTC400 with adjustable temperature, 50-70°C. The product is available in one size, DN25 and comes with a Wilo pump.

The pump can be set to constant speed, variable or constant pressure. The compact design of the unit has been thought through and focus put on components such as pump resulted in high performance of the pump group.

SERVICE AND MAINTENANCE
The circulation unit do not require any specific maintenance under normal conditions.

KEY BENEFITS
- Highly efficient circulation pumps, EEI ≤0,20
- High class insulation of hydraulic parts
- Thermostatic load valve
- Available temperature setting in range 50-70°C
- Compact design
- Tested and ready to use
- Designed to last and perform
- High-end product finish

RELATED ACCESSORIES
See separate data sheet for further detailed information.

ESBE Manifold

Manifold for 1, 2, or 3 circulation units. With integrated separator function.

Art. No.	
66001100	GMA411- for 1 unit
66001600	GMA521 - for 2 units
66001700	GMA531 - for 3 units

Manifold for 2, 3, 4 or 5 circulation units. Without integrated separator function.

Art. No.	
66001200	GMA421- for 2 units
66001300	GMA431 - for 3 units
66001400	GMA441 - for 4 units
66001500	GMA451 - for 5 units

© Copyright. Rights reserved to make alterations.

RETURN TEMPERATURE UNIT
THERMOSTATIC, MIXING FUNCTION SERIES GST200

PRODUCT ASSORTMENT

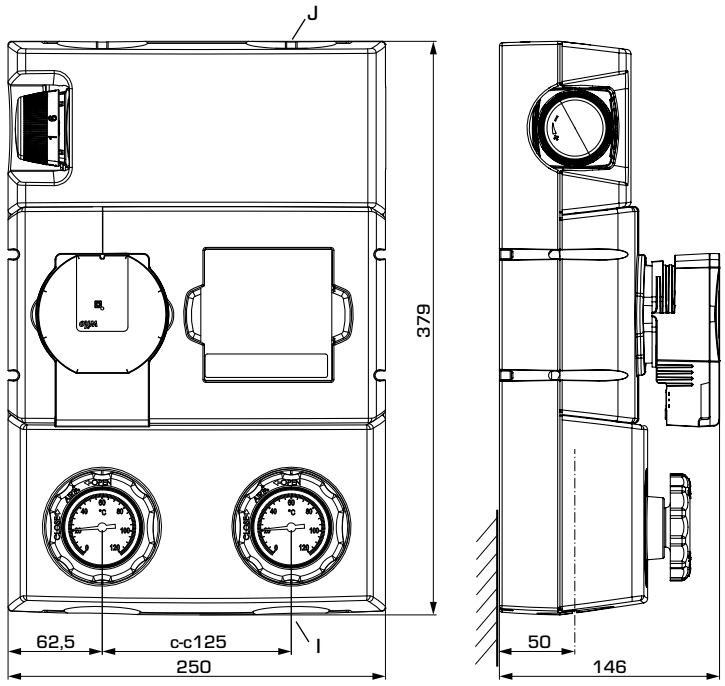

GST241

SERIES GST240, ADJUSTABLE TEMPERATURE SETTING

Art. No.	Reference	DN	Pump	Temperature range	Connections		Weight [kg]	Replaces	Note
					I	J			
61121200	GST241	25	Wilo PARA 25-130/6	50-70°C	G 1"	G 1½"	5,6	61120100	

© Copyright. Rights reserved to make alterations.

RETURN TEMPERATURE UNIT
THERMOSTATIC, MIXING FUNCTION SERIES GST200

TECHNICAL DATA Visit esbe.eu for further detailed information.

The Return temperature unit, in general

Pressure class: PN 10
Media temperature: max. +100°C
min. 5°C
Ambient temperaure: max. +58°C
min. 0°C
Working pressure: 1,0 MPa (10 bar)
Dimensions: DN25
Connections, Internal thread (G), ISO 228/1
External thread (G), ISO 228/1
Insulation: EPP λ 0,036 W/mK
Media: Heating water (in accordance with VDI2035)
Water / Glycol mixtures, max. 50%.
water / glycol mixtures are affecting the pump performance. In case of Applications where water / glycol mixtures are used, pump performance should be considered.

Material, in contact with water

Components: Brass, Cast iron, Steel
Sealing material: PTFE, Aramid fibre, EPDM

EEI (Energy Efficiency Index), circulation pump: ≤0,20

Conformities and certificates

LVD 2014/35/EU
EMC 2014/30/EU
RoHS 2011/65/EU
ErP 2009/125/EU

PED 2014/68/EU, article 4.3

The integrated Load valve

Valve type: VTC422
Max. differential pressure drop, mixing: 100 kPa (1 bar)
Rangeability Kv^{max}/Kv^{min}, A-AB: 100
Leakrate in % of flow*, A-AB: Tight sealing
Leakrate in % of flow*, B-AB: Tight sealing
Opening temperature - Adjustable temperature: 50–75°C

* Differential pressure 100kPa (1 bar)

The integrated circulation pump

Pump type: Wilo PARA 25-130/6-43/SC
Power supply: 230 ± 10% V AC, 50/60 Hz
Power consumption: 3–43 W
Enclosure rating: IP X4D
Insulation class: F
EEI (Energy Efficiency Index): ≤0,20

WIRING

Please see the Installation Instruction

© Copyright. Rights reserved to make alterations.

RETURN TEMPERATURE UNIT
THERMOSTATIC, MIXING FUNCTION SERIES GST200

DIMENSIONING, PUMP CAPACITY DIAGRAM

Example: Start with the heat demand of the heating circuit (e.g. 15 kW) and move horizontally to the right in the diagram to the Δt = 15°C (temperature difference between flow and return of the heating circuit). Next go up and find the possible duty points.

Setting I gives duty point A with a residual head of 20 kPa. Setting II and III gives duty point B with a residual head of 38 kPa.

SERIES GST241 – Constant differential pressure, Wilo pump

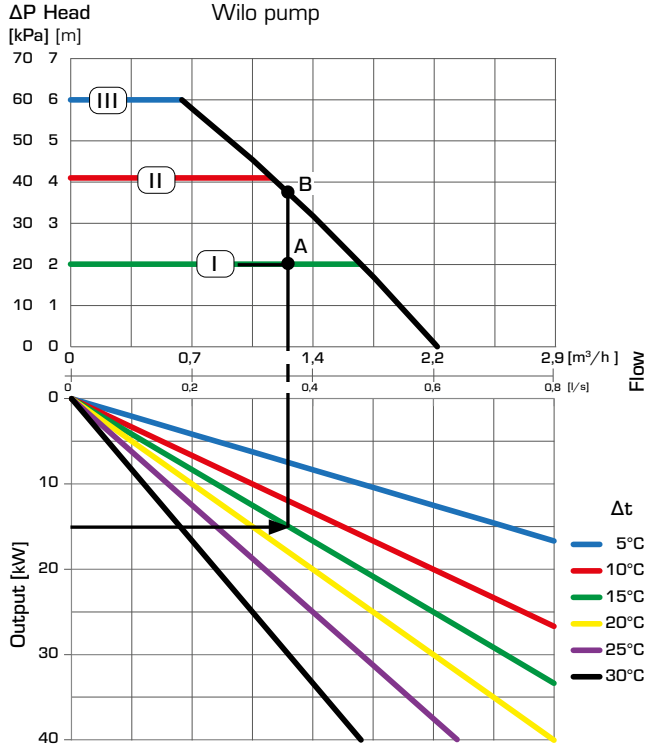

SERIES GST241 – Variable differential pressure, Wilo pump

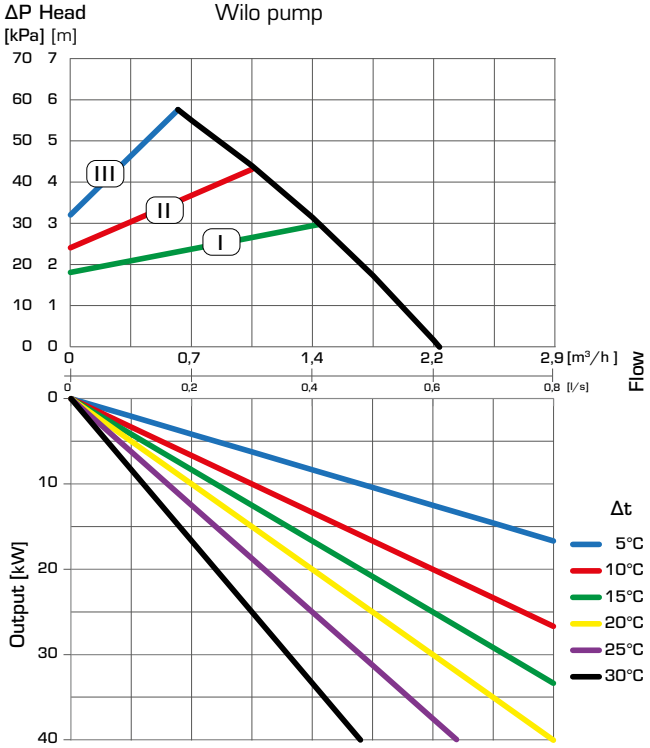

SERIES GST241 – Constant speed, Wilo pump

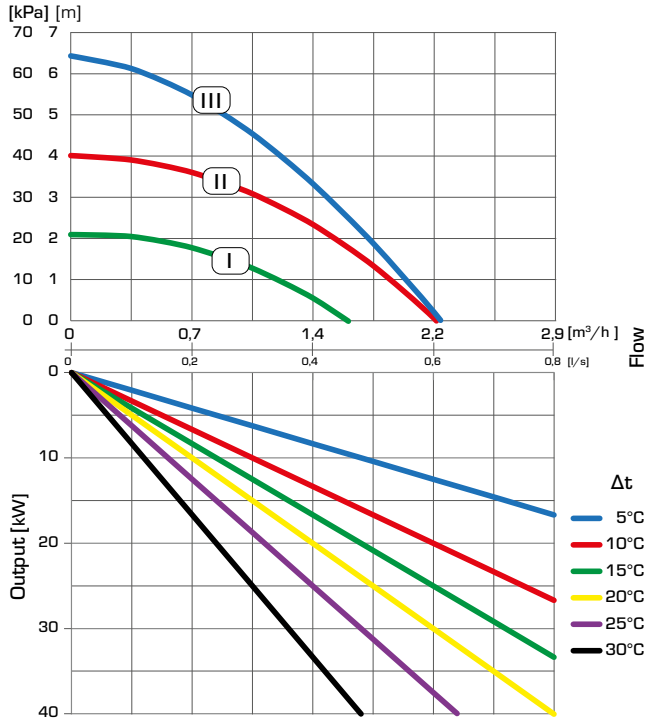

© Copyright. Rights reserved to make alterations.

RETURN TEMPERATURE UNIT
THERMOSTATIC, MIXING FUNCTION SERIES GST200

INSTALLATION EXAMPLES

1

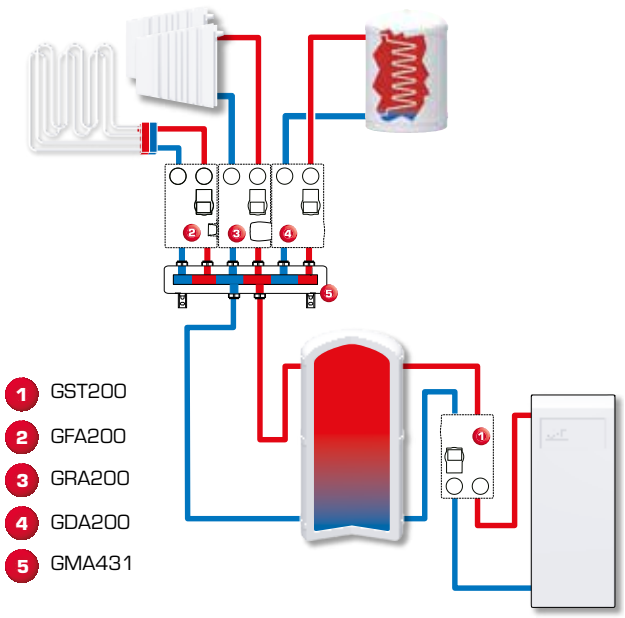

2

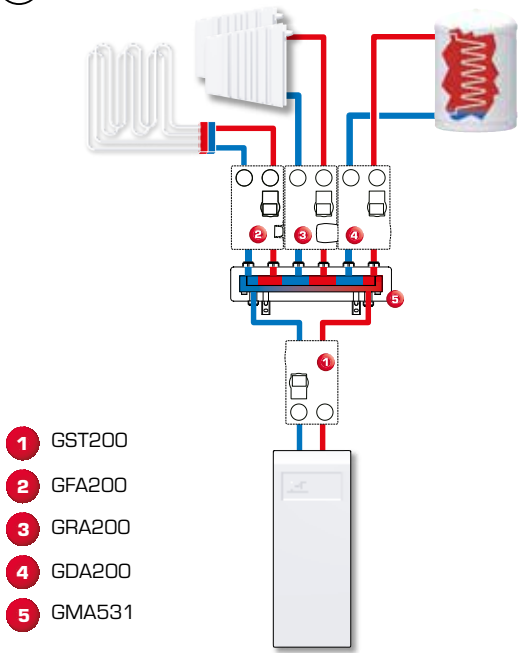

The return temperature unit series GST200 with boiler or accumulation tank as return temperature control and protection device for solid fuel boilers.
In both cases the GST200 secures that the boiler gets up to a high combustion temperature to ensure the lowest emission, high efficiency of the boiler reduce tarring and increase life span of the boiler (preventing condensation). The benefit of using the unit in these applications is the protection of the boiler against condensation, increasing the life span of the boiler and providing the right temperature through the whole combustion process.

The shown applications are only examples of product use!
Before using the product in any application, the regional and national regulations need to be checked.

© Copyright. Rights reserved to make alterations.